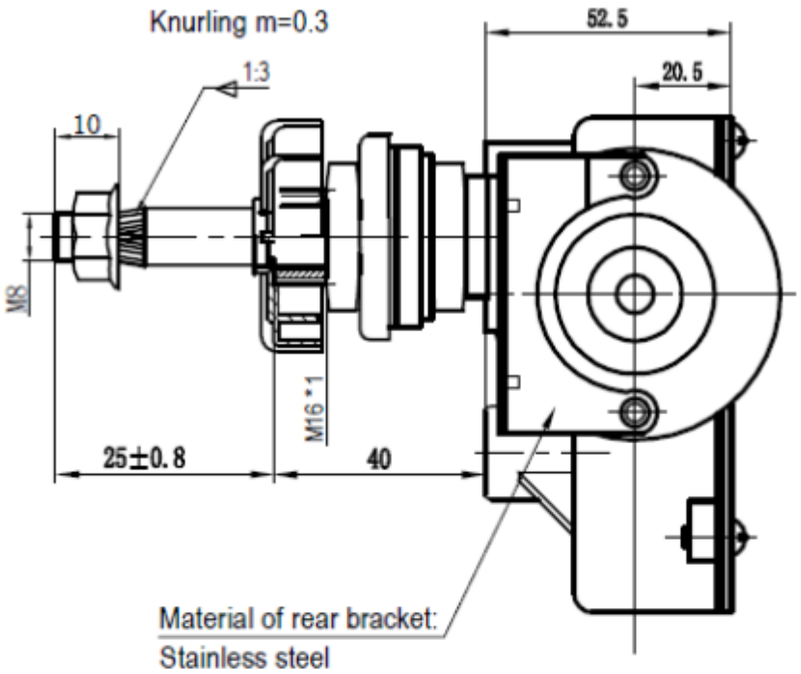

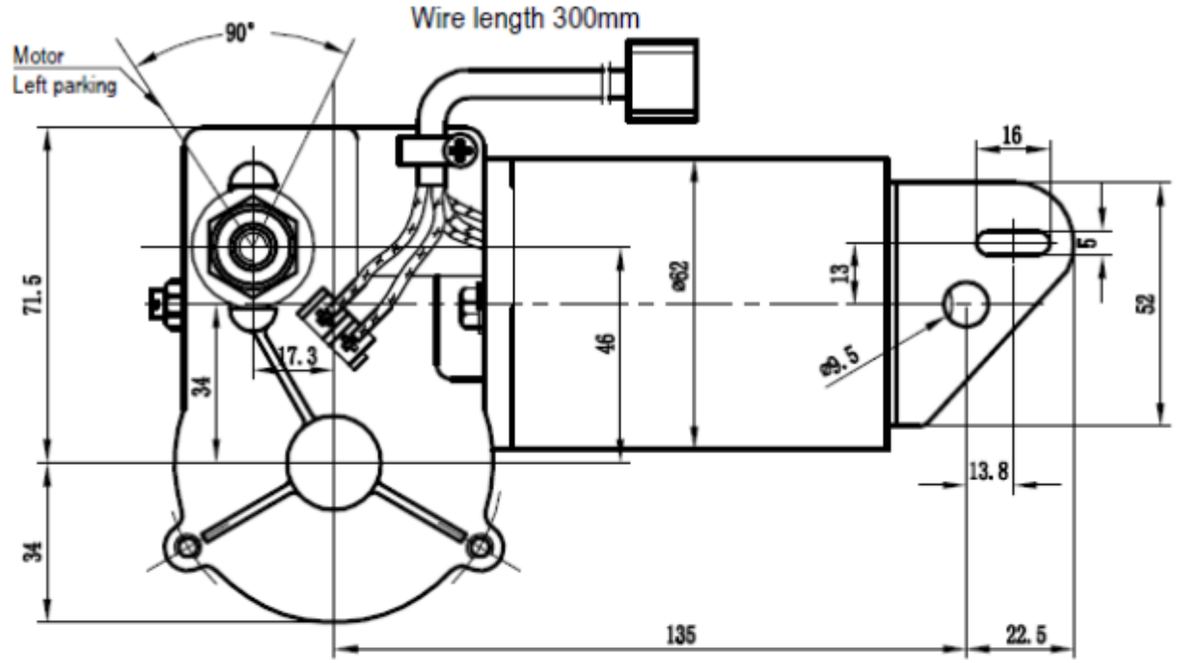

Circuit diagram

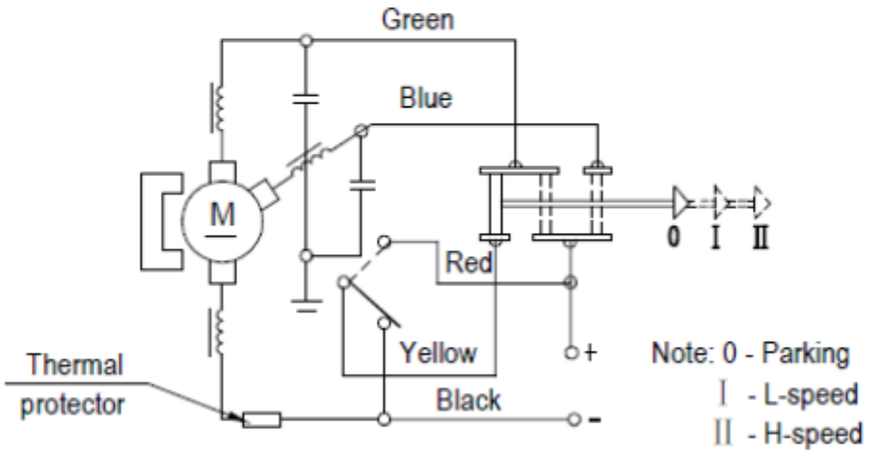

Motor plug
(Model: DJ7061-6.3-11)

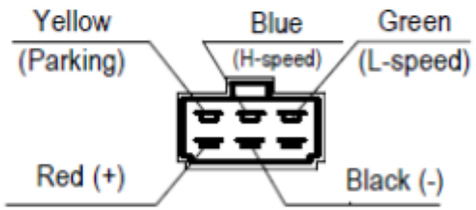

ITEM	BASIC DATA			
Rated voltage	12V		24V	
Test voltage	13.5V		27V	
Wiping speed	30±5～45±5 rpm			
No-load currect (A)	H-speed	L-speed	H-speed	L-speed
	≤3.5	≤2.5	≤2.0	≤1.5
Working torque	5Nm (L-speed)			
Brake torque	≥22N.m (L-speed)			
Noise	≤55dB (A)			

Note:
1/ Material of output shaft is stainless steel;
Material of shaft housing is brass;
2/ Motor painted white;
3/ Without W.E logo;
4/ Ground not connected to ground

				Wiper motor		Automobile Accessory Factory		
Edit	Mark	Signature	Date					
Design			2011.08.18			Customer	Osculati S.P.A	
Proofread				Weight		Model	19 183 01 12V 19 183 02 24V	
Review				View		Drawing #		
Approval				Scale	1:1	Edition	A	Pages